ETSI NFV Conference

Evolving NFV towards the Next Decade
Celebrating the 10th Anniversary of ETSI NFV

Welcome address

Yoshihiro Nakajima (ISG chair)

07/03/2023

ETSI NFV ISG 10th Anniversary

Original NFV whitepaper triggered transformation in telecoms industry

Uwe Michel (Deutsche Telekom) presenting the original WP
at SDN & OpenFlow World Congress in Darmstadt in October 2012

NFV concepts

Network Functions Virtualisation (NFV) is about

- Decoupling network functions functionality from infrastructure and relocating the network functions from dedicated appliances to pools of resources leveraging commodity-of-the-shelf (COTS) hardware.
- "Softwarization" of the network enabling automation of deployment and operations.

Enablers

- General purpose processor (GPP) advances enabling COTS.
- Compute, storage and network virtualization technologies.
- Cloud computing.
- Artificial intelligence/machine learning, policy management, etc.
- Model-driven management, etc.

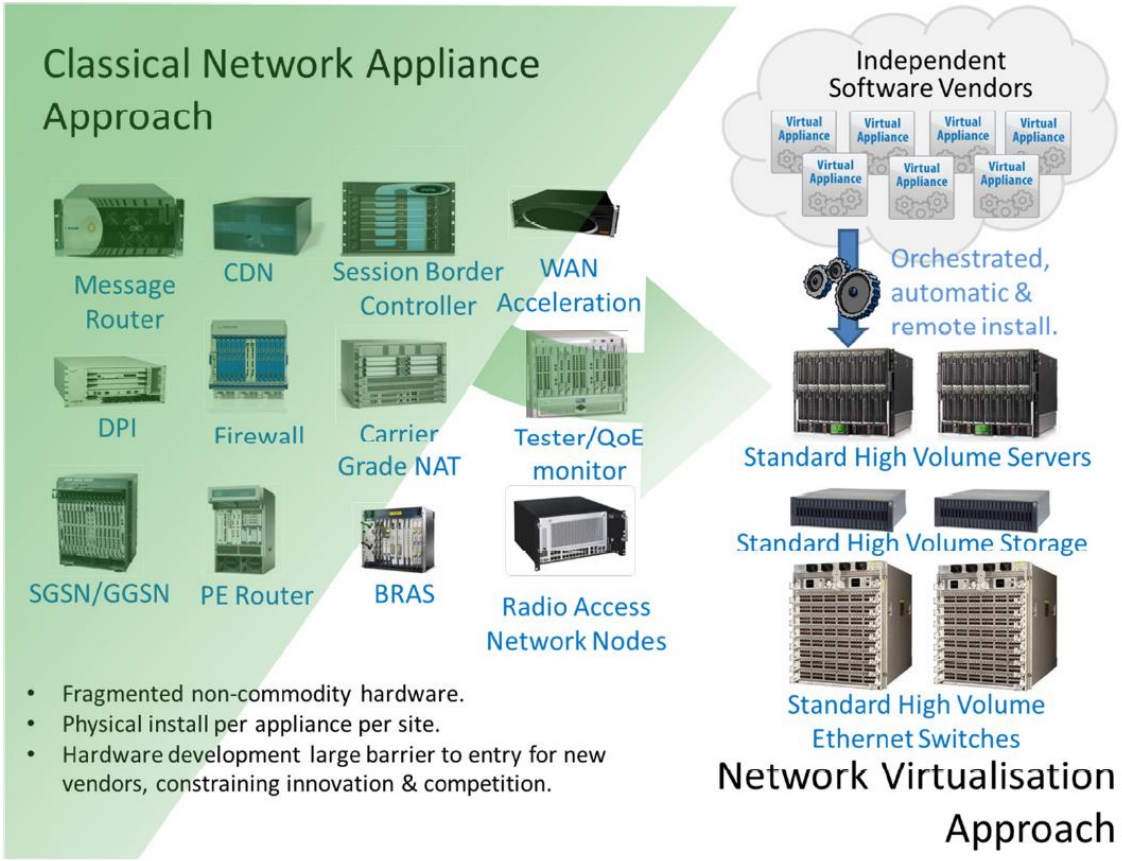

Figure 1: Vision for Network Functions Virtualisation

Source : "Network Functions Virtualisation" white paper [Online: https://docbox.etsi.org/ISG/NFV/Open/Publications_pdf/White%20Papers/NFV_White_Paper1_2012.pdf]

How NFV concept was conceived in 2012

ISG NFV was established for for open collaboration

Approved on 23 October 2012

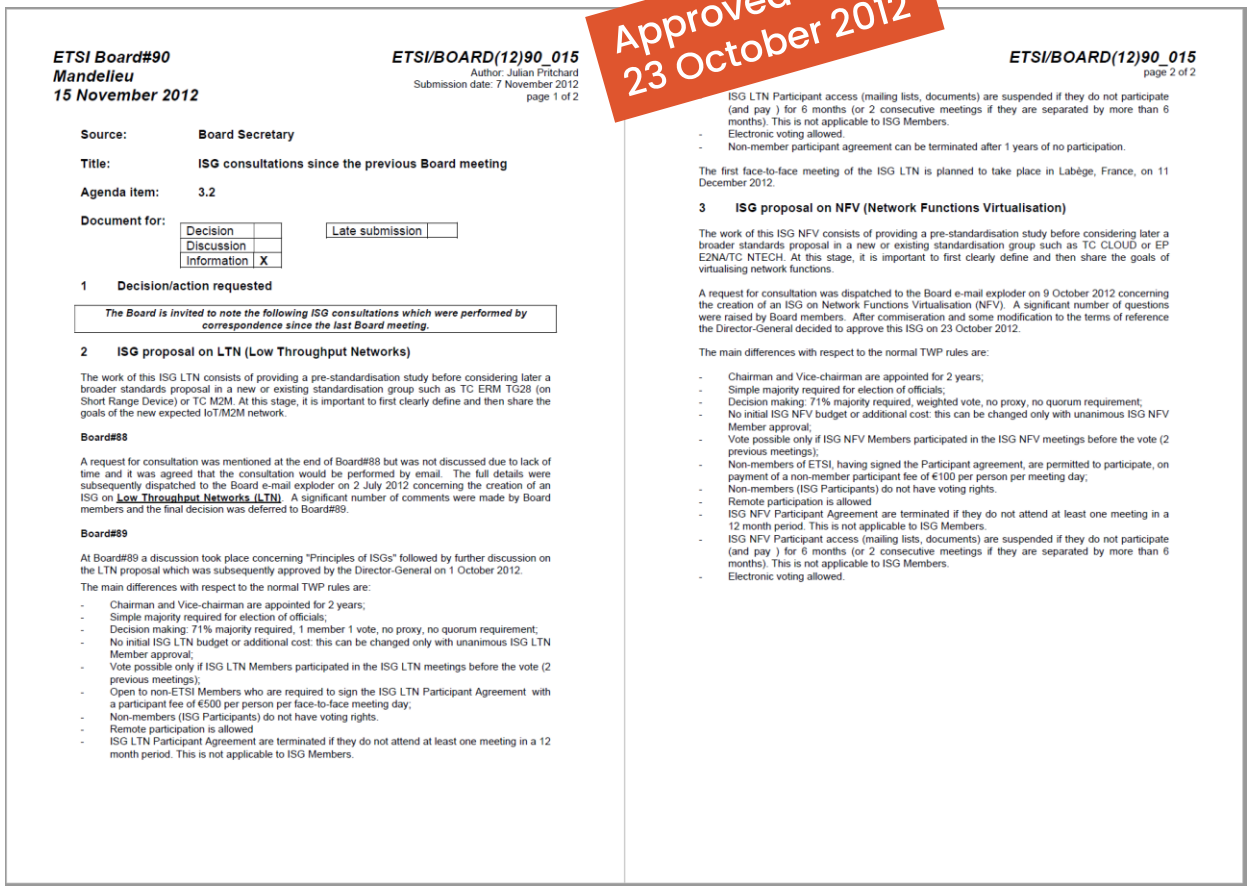

ETSI Board#90
Mandelieu
15 November 2012

ETSI/BOARD(12)90_015
Author: Julian Pritchard
Submission date: 7 November 2012
page 1 of 2

Source: Board Secretary

Title: ISG consultations since the previous Board meeting

Agenda item: 3.2

Document for:

Decision		Late submission	
Discussion			
Information	X		

1 Decision/action requested

The Board is invited to note the following ISG consultations which were performed by correspondence since the last Board meeting.

2 ISG proposal on LTN (Low Throughput Networks)

The work of this ISG LTN consists of providing a pre-standardisation study before considering later a broader standards proposal in a new or existing standardisation group such as TC ERM TG28 (on Short Range Device) or TC M2M. At this stage, it is important to first clearly define and then share the goals of the new expected IoT/M2M network.

Board#88

A request for consultation was mentioned at the end of Board#88 but was not discussed due to lack of time and it was agreed that the consultation would be performed by email. The full details were subsequently dispatched to the Board e-mail exploder on 2 July 2012 concerning the creation of an ISG on **Low Throughput Networks (LTN)**. A significant number of comments were made by Board members and the final decision was deferred to Board#89.

Board#89

At Board#89 a discussion took place concerning "Principles of ISGs" followed by further discussion on the LTN proposal which was subsequently approved by the Director-General on 1 October 2012.

The main differences with respect to the normal TWP rules are:

- Chairman and Vice-chairman are appointed for 2 years;
- Simple majority required for election of officials;
- Decision making: 71% majority required, 1 member 1 vote, no proxy, no quorum requirement;
- No initial ISG LTN budget or additional cost: this can be changed only with unanimous ISG LTN Member approval;
- Vote possible only if ISG LTN Members participated in the ISG LTN meetings before the vote (2 previous meetings);
- Open to non-ETSI Members who are required to sign the ISG LTN Participant Agreement with a participant fee of €500 per person per face-to-face meeting day;
- Non-members (ISG Participants) do not have voting rights.
- Remote participation is allowed
- ISG LTN Participant Agreement are terminated if they do not attend at least one meeting in a 12 month period. This is not applicable to ISG Members.

ETSI/BOARD(12)90_015
page 2 of 2

ISG LTN Participant access (mailing lists, documents) are suspended if they do not participate (and pay) for 6 months (or 2 consecutive meetings if they are separated by more than 6 months). This is not applicable to ISG Members.
- Electronic voting allowed.
- Non-member participant agreement can be terminated after 1 years of no participation.

The first face-to-face meeting of the ISG LTN is planned to take place in Labège, France, on 11 December 2012.

3 ISG proposal on NFV (Network Functions Virtualisation)

The work of this ISG NFV consists of providing a pre-standardisation study before considering later a broader standards proposal in a new or existing standardisation group such as TC CLOUD or EP E2NA/TC NTECH. At this stage, it is important to first clearly define and then share the goals of virtualising network functions.

A request for consultation was dispatched to the Board e-mail exploder on 9 October 2012 concerning the creation of an ISG on Network Functions Virtualisation (NFV). A significant number of questions were raised by Board members. After commiseration and some modification to the terms of reference the Director-General decided to approve this ISG on 23 October 2012.

The main differences with respect to the normal TWP rules are:

- Chairman and Vice-chairman are appointed for 2 years;
- Simple majority required for election of officials;
- Decision making: 71% majority required, weighted vote, no proxy, no quorum requirement;
- No initial ISG NFV budget or additional cost: this can be changed only with unanimous ISG NFV Member approval;
- Vote possible only if ISG NFV Members participated in the ISG NFV meetings before the vote (2 previous meetings);
- Non-members of ETSI, having signed the Participant agreement, are permitted to participate, on payment of a non-member participant fee of €100 per person per meeting day;
- Non-members (ISG Participants) do not have voting rights.
- Remote participation is allowed
- ISG NFV Participant Agreement are terminated if they do not attend at least one meeting in a 12 month period. This is not applicable to ISG Members.
- ISG NFV Participant access (mailing lists, documents) are suspended if they do not participate (and pay) for 6 months (or 2 consecutive meetings if they are separated by more than 6 months). This is not applicable to ISG Members.
- Electronic voting allowed.

Designed for good interaction

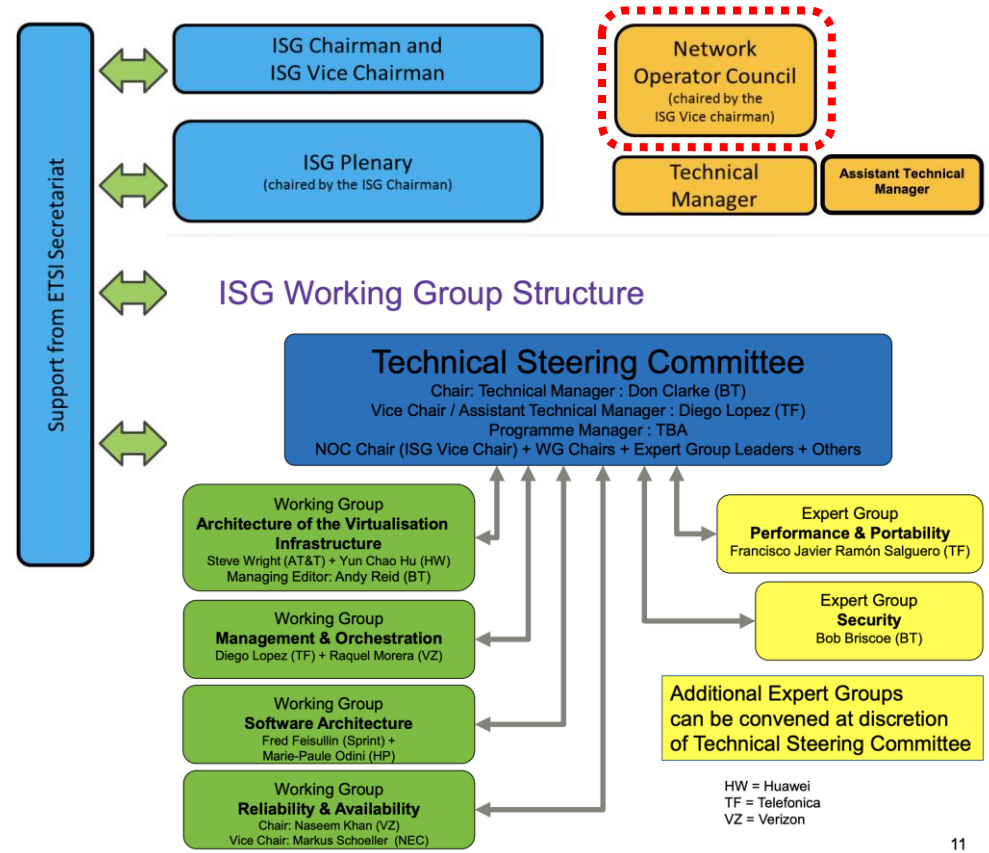

ETSI NFV Founders

Joan Triay and Tetsuya chairing a TSC meeting at the Waltham meeting in 2013.

ETSI NFV founders: Steve Wright (AT&T), Prodip Sen (Verizon), Sandra Rivera (Intel), Tetsuya Nakamura (Docomo), Margaret Chiosi (AT&T), Francisco Javier Ramón Salguero (Telefonica), Don Clarke (BT).

First NOC meeting at NFV #1 Plenary

19 operators participated

Plenary meeting memories

Plenary meeting memories

PoC, collaborations, and interoperability

ETSI Plugtests Report V1.0.0 (2019-07)

4th ETSI NFV Plugtests
Sophia Antipolis, France
3rd – 7th June 2019

PLUGTESTS™
INTEROP EVENTS

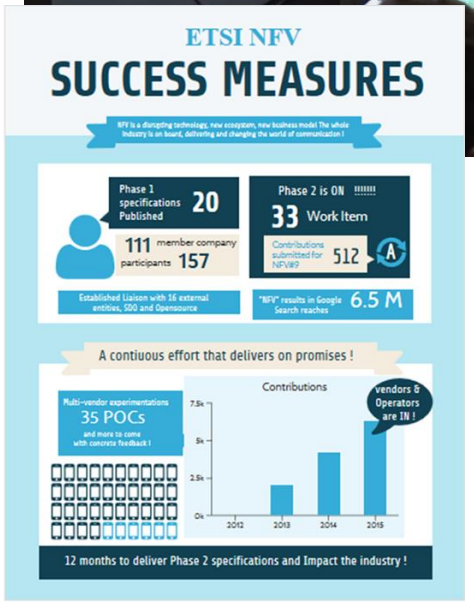

NFV&MEC IOP Plugtests 2021 - Participation

- 4 VNF (Virtualized / Containerized)
- 2 VNFM
- 8 NFVO
- 3 VIM&NFVI
- 4 MEC Platforms and Systems
- 4 MEC Apps
- 2 Tool Providers
- 7 Supporting Open Source Communities
- 5 Observers (Operators)

© ETSI 2021

Total 44 PoCs are performed

NFV architecture evolution

2013-2017 / Rel 2

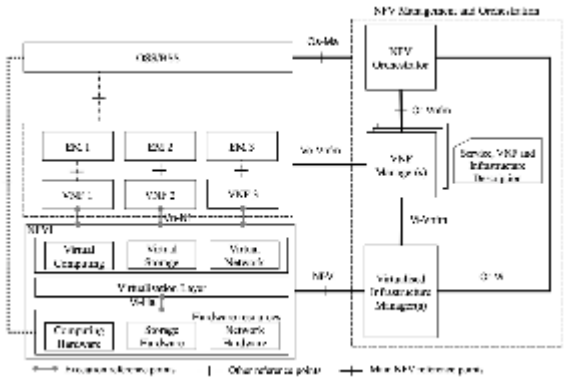

- interoperability of NFV solutions
  - VNF Package and VNF and NS Descriptors,
  - Acceleration,
  - Internal and external NFV-MANO interfaces.

2018-2021 / Rel 3

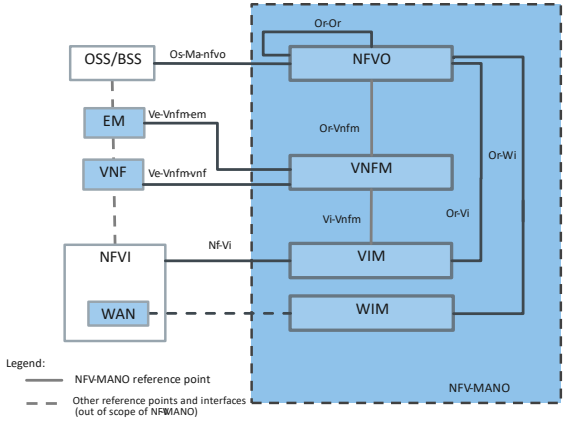

- feature enriching the NFV Architectural Framework, readying NFV for deployment and operation
  - Policy framework,
  - VNF snapshot,
  - NFV-MANO management,
  - Multi-site

2022+ / Rel 4

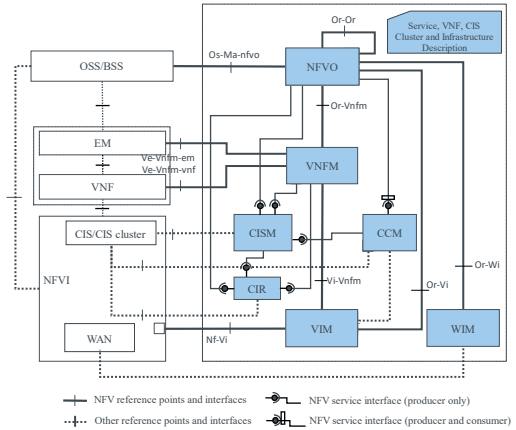

- orchestration, cloudification and simplification of network deployment and operations.
  - Cloud Native, Container-based deployments,
  - Further 5G support,
  - Autonomous management and automation,
  - Generic OAM functions

Rel 5

Under discussion

Rel 6

Under discussion and call for input

- consolidation and ecosystem.
  - Green NFV
  - NFV for vRAN
  - Flexible VNF deployments
  - VNF configuration,
  - SBA concepts,
  - Cloud-native VNF reliability

ETSI NFV (2013) | MANO Arch (2013) | OPNFV (2014) | ONAP (2016) | ETSI & 3GPP SA5 Alignment (2016) | ETSI ZSM (2017) | ETSI-ONAP Alignment (2018) | O-RAN (2018) | Nephio (2022) | ETSI-ORAN CA (2022)

ETSI NFV Releases

GS: Group Specification (normative provisions)
GR: Group Report (only informative)

NOTE: Release 4 and 5 are still in "full" development, number of specifications will grow once completed.

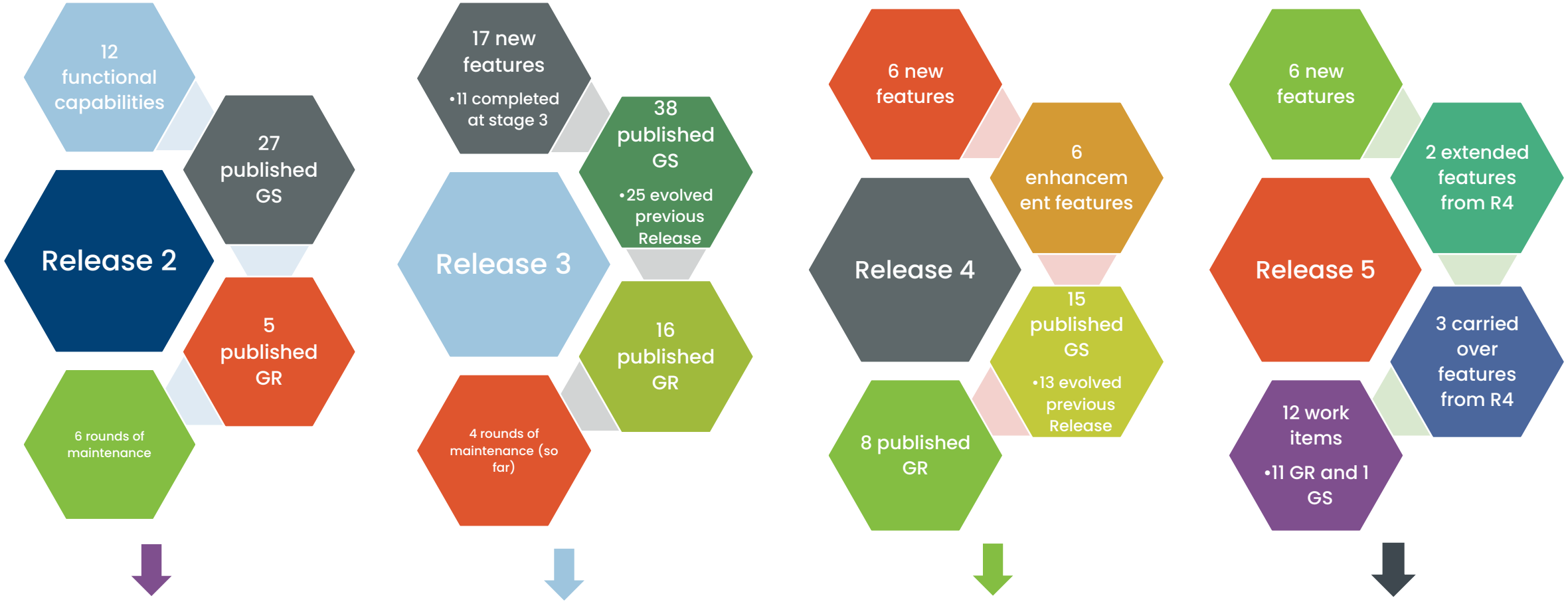

Release 2 Description (latest v1.13.0)

Release 3 Description (latest v0.10.0)

Release 4 Description (latest v0.5.0)

Release 5 Description (latest v0.0.2)

Latest specification (status end of 2022)

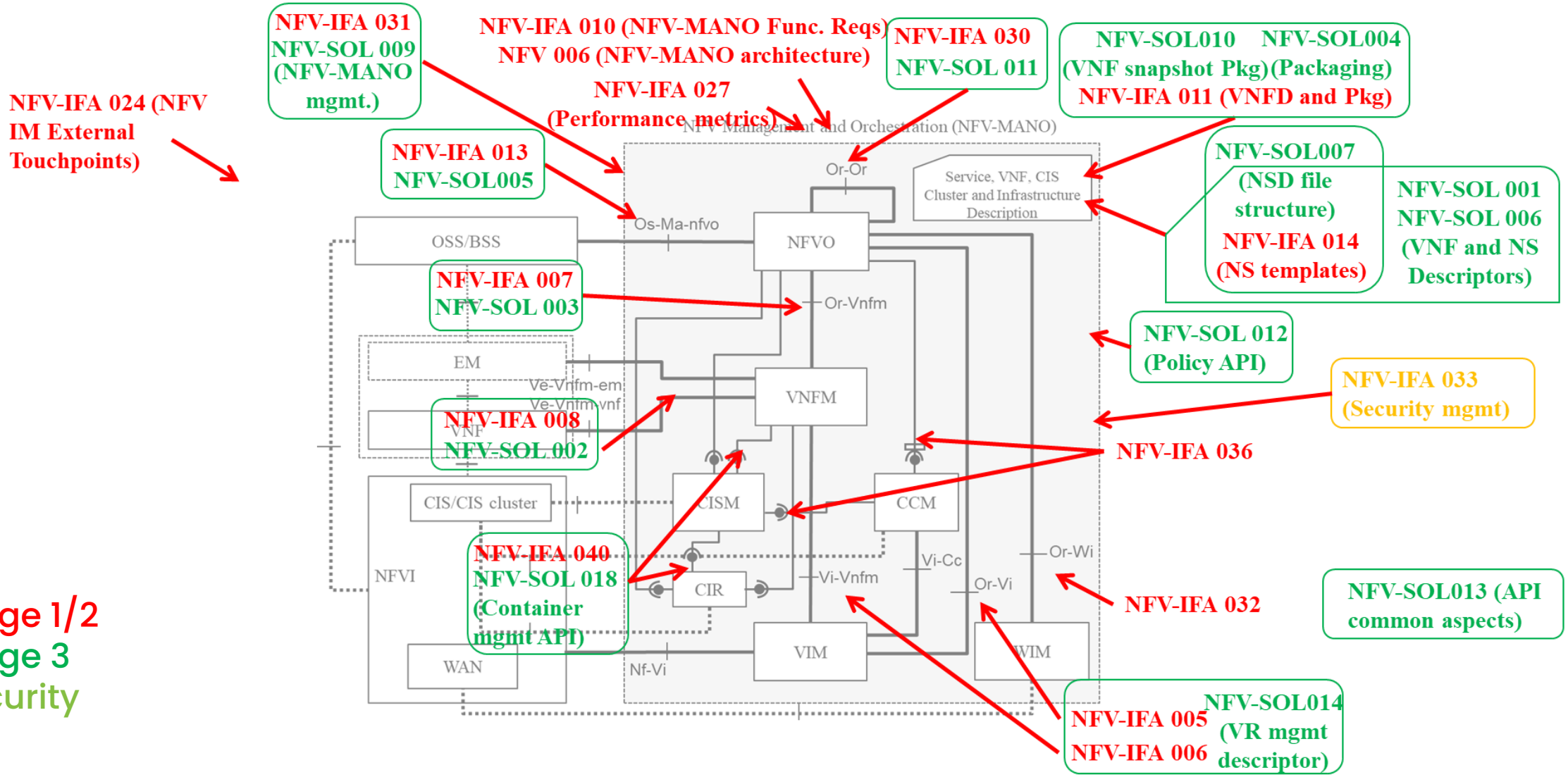

Stage 1/2
Stage 3
Security

NFV journey with partners and communities

Thank you for rapporteurs to develop ETSI NFV specification

Abdel Hafiz RABI
Abinash VISHWAKARMA
Al MORTON
Alex LEADBEATER
Amanda XIANG
Andrei KOJUKHOV
Andy BENNETT
Andy REID
Anne-Marie PRADEN
Arturo MARTIN DE NICOLAS
Ashutosh DUTTA
Bertrand SOUVILLE
Bob BRISCOE
Brian SKERRY
Bruno CHATRAS
Carsten ROSSENHOEVEL
Cecilia CORBI
Chao YU
CHEN WANG
cheng HUANG
Chidung LAC
Chuyi GUO
Cristina BADULESCU
Desaraju KALYAN
Diego LOPEZ
Elena DEMARIA
Ernest BAYHA
Evelyne ROCH
Fan YANG
Fei LI
Francisco-Javier RAMÓN SALGUERO
Frank MASSOUDIAN
Gerald KUNZMANN
Gerardo GARCIA DE BLAS
Gergely CSATARI
Gurpreet SINGH
Haibin CHU
Haitao XIA
Hammad ZAFAR
Haomian ZHENG
Hidefumi NAKAMURA
Hiroshi DEMPO
Huicong LIANG
Huilan LU
Janusz PIECZERAK
Jiachen ZHANG
Jinwei XIA
Joan TRIAY
Joerg AELKEN
Joey CHOU
Johann TONSING
Jon Fannar KARLSSON-TAYLOR
Jong-Hwa YI
Julien MAISONNEUVE
Jürgen QUITTEK
Kahina LAZRI
Kostas KATSALIS
Kurt ROEMER
Leslie WILLIS
Lijuan CHEN
Lingli DENG
Mahesh JETHANANDANI
Manchang JU
Marc FLAUW
Marcus BRUNNER
Marcus SCHOELLER
marie-paule ODINI
Mark SHEPHERD
Mehmet TOY
Michael KLOTZ
Mihai SERB
Mike BURSELL
Minpeng QI
Nabil DAMOUNY
Percy TARAPORE
Peter WORNDLE
Pierre COURBON
Pierre LYNCH
Pradheepkumar SINGARAVELU
Pradheepkumar SINGARAVELU
Rabi ABDEL
Rajavarma BHYRRAJU
Rajesh RAJAMANI
Rajshree CHAR
Ramesh RAMANATHAN
Scott CADZOW
Shitao LI
Stefan ARNTZEN
Steven WRIGHT
Susana SABATER
Tetsuya NAKAMURA
Thinh NGUYENPHU
Tony SABOORIAN
Ulrich KLEBER
Uwe RAUSCHENBACH
Valerie YOUNG
Vlademir BRUSSE
Xu YANG
Yinan LIU
Yuhan ZHANG
Yusuke OKAZAKI
Yuya KUNO
Zarrar YOUSAF
Zhipeng HUANG
Ziad AHMED

NFV adaptation (survey in September 2021)

NFV commercial deployments exist in all network domains, most in mobile/fixed core and radio access networks.

- Higher-than-expected results in avoiding vendor lock-in, fast failover of service, automation and speeding up service deployment.
- Specifications from all developed NFV Releases are being leveraged.

NFV Releases adoption

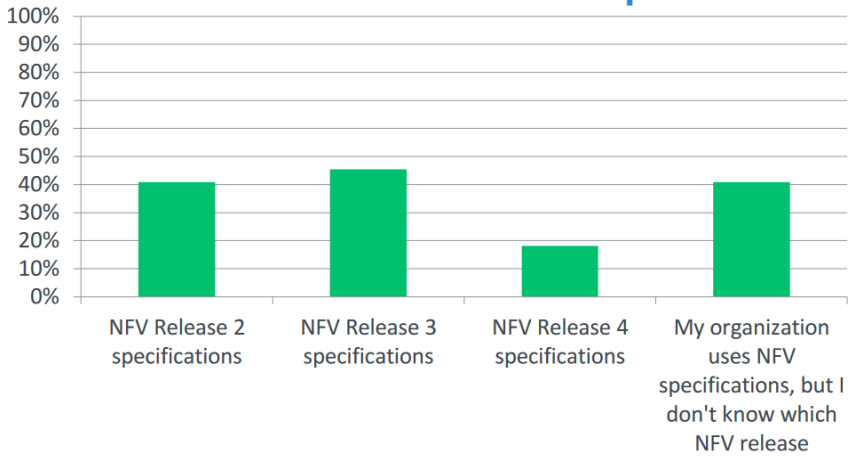

Deployments in network service providers

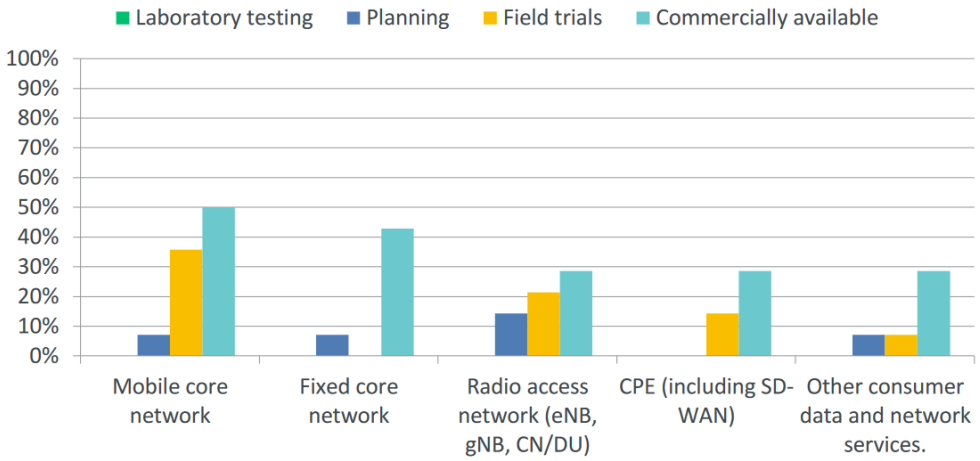

Expectations achieved by network service providers

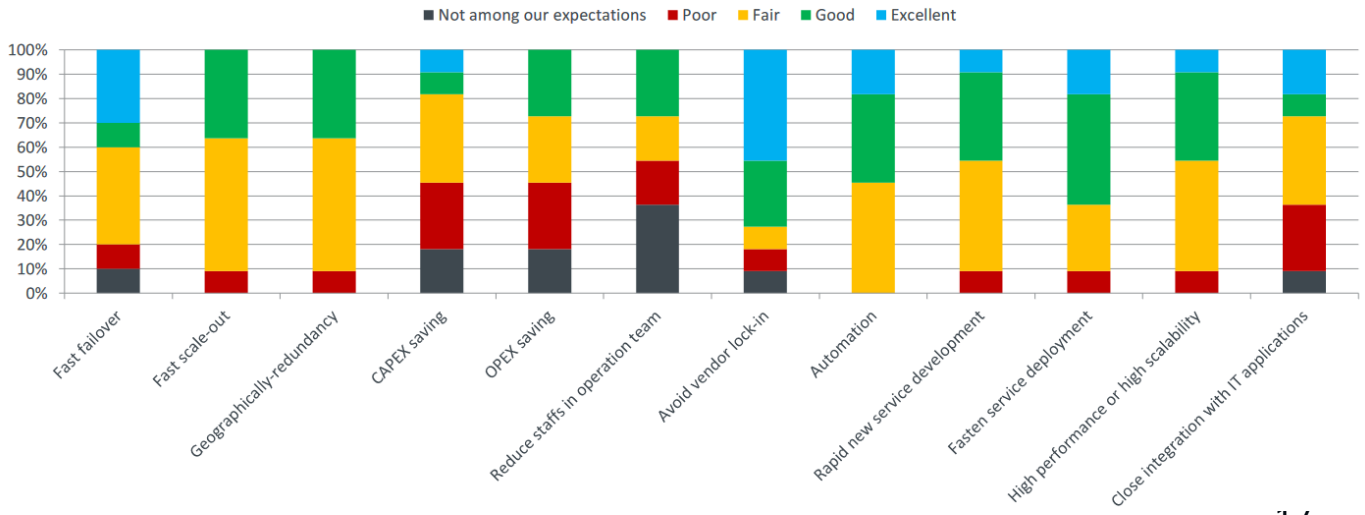

ETSI NFV Conference program

Day-1 (6th March)

- SESSION 1: ETSI ISG NFV KEY ACHIEVEMENTS
  - Keynote speech (Caroline Chappell)
  - Operators NFV experience and future vision
    (BT, Softbank, China Mobile, DOCOMO, Verizon)
- ETSI ISG NFV 10th Anniversary Celebration Cocktail Party

Day-2 (7th March)

- SESSION 2: ETSI ISG NFV PARTNERSHIPS / COOPERATIONS
  - Collaboration with SDOs, open source communities, and research communities
- SESSION 3: ETSI ISG NFV MOVING FORWARD
  - NFV ISG future activity plan
  - Whitepaper
    - Evolving NFV towards the Next Decade
    - In the Light of Ten Years from the NFV Introductory Whitepaper

Celebrating ETSI NFV ISG 10th Anniversary